PZ2-KZ-25 technical drawing

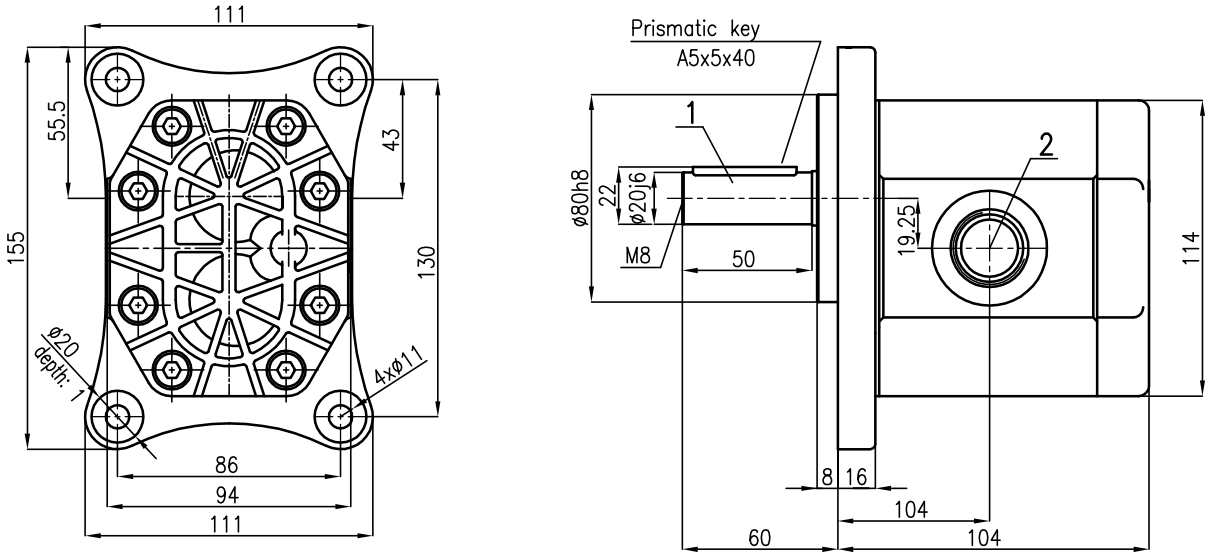

1 – shaft cylindrical

2 – 2xM27x2A port thread