PZ2-K-40 technical drawing

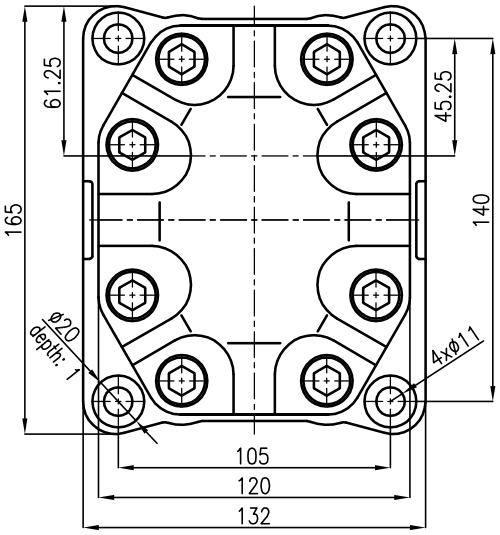

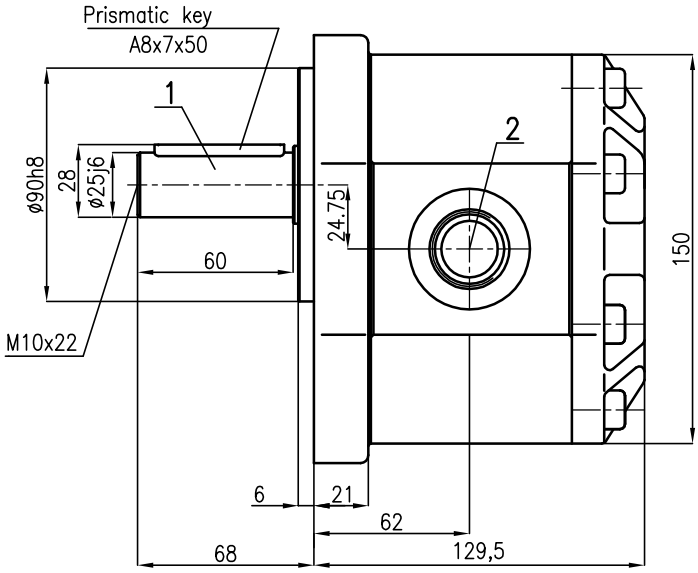

1 – shaft cylindrical

2 – 2xM33x2A port thread