1PZ4-7G technical drawing

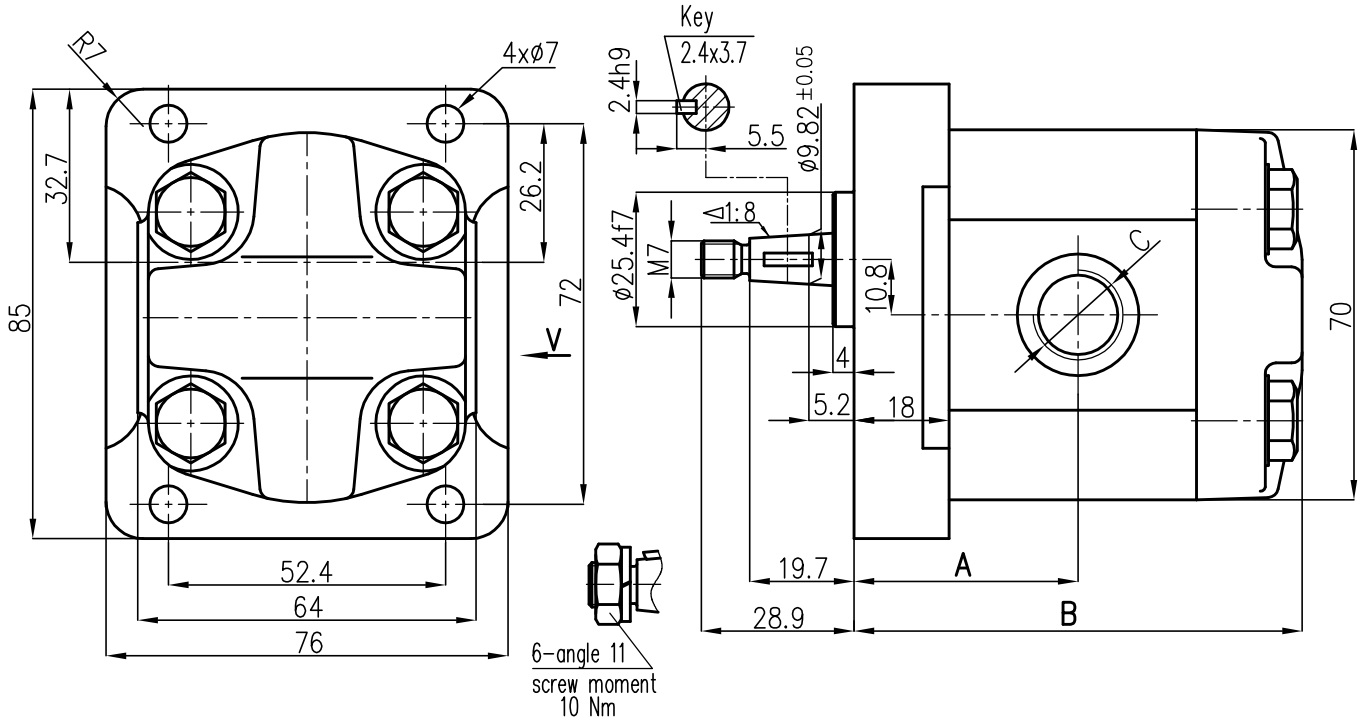

Geom. displac. ccm/rot	Pump designation	Dimmension			
		A	B	Inlet D	Outlet C
1	1PZ4-1/25-x-77G	37.4	74.9	G 3/8 depth:14	G 3/8 depth:14
1.2	1PZ4-1.2/25-x-77G	37.8	75.7		
1.6	1PZ4-1.6/25-x-77G	38.6	77.2		
2	1PZ4-2/25-x-77G	39.4	78.8		
2.5	1PZ4-2.5/25-x-77G	40.4	80.8		
3.2	1PZ4-3.2/25-x-77G	41.7	83.5	G 1/2 depth:16	
4	1PZ4-4/22-x-77G	43.3	86.6		
5	1PZ4-5/22-x-77G	45.2	90.5		
6.3	1PZ4-6.3/17-x-77G	47.8	95.6		
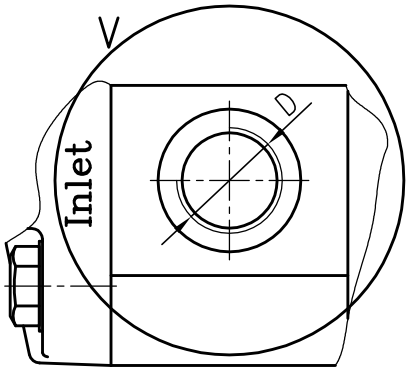
x - direction of rotation: 1 - counter clockwise; 2 - clockwise